PEM
Power Electronic Measurements

Design file	Dimension Drawing
Product file	CWT
Revision date	Dec 2011
Issue No.	02
Sheet No.	1 of 1
Notes	For Guidance Only

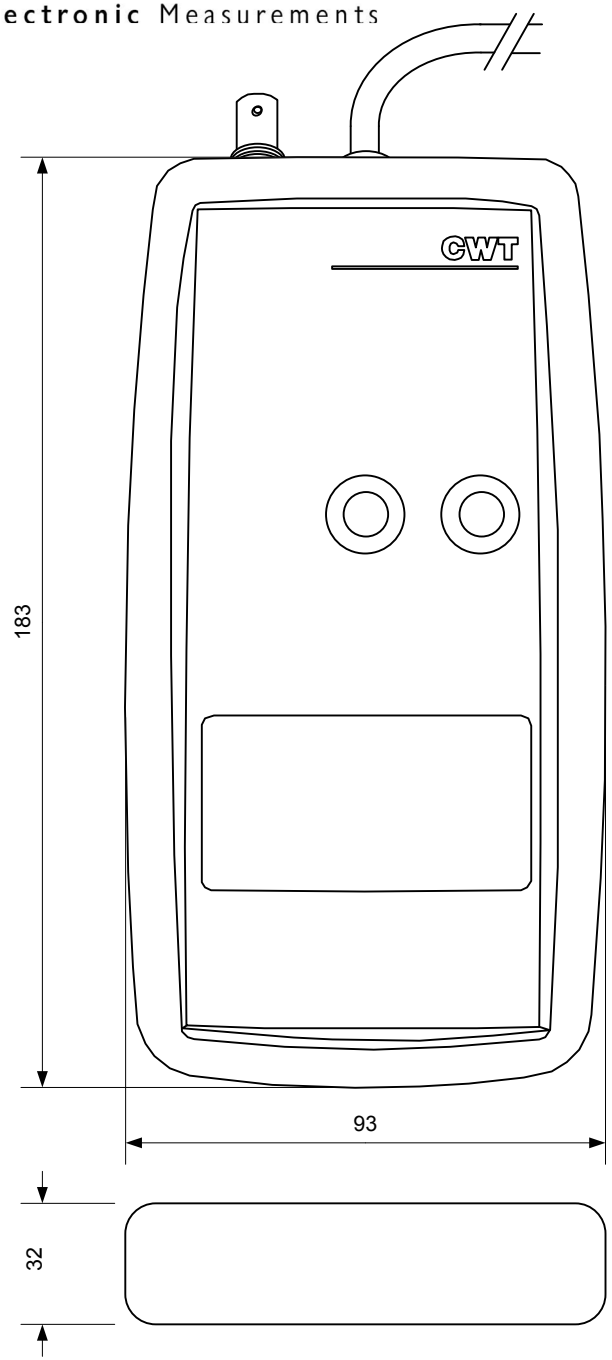

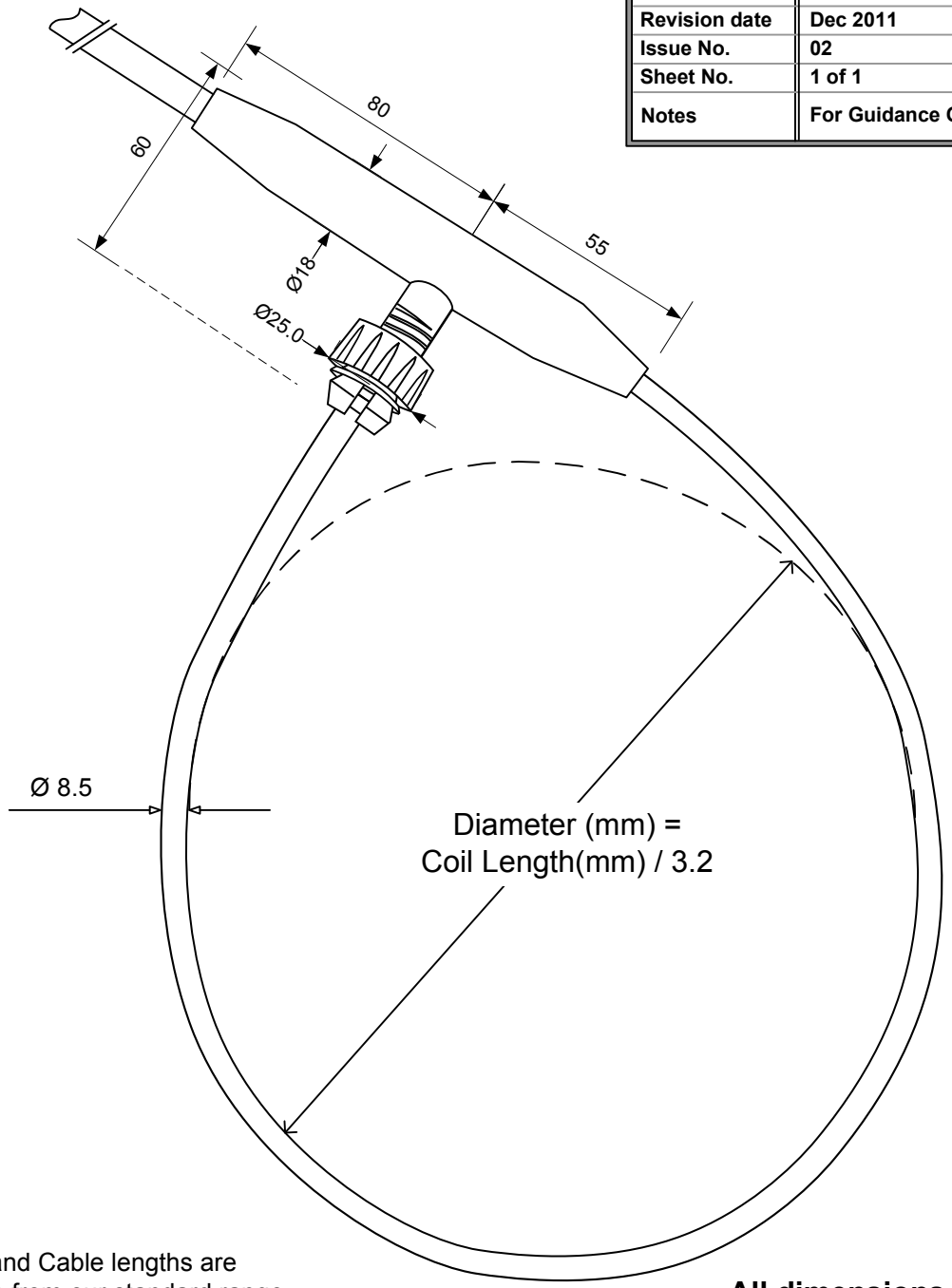

Coil and Cable lengths are selectable from our standard range or made to specific requirements

All dimensions mm
Drawing Not To Scale